MACHINING DEVIATIONS FOR LINEAR DIMENSIONS	RANGE	0 - 6	6 - 30	30 - 120	120 - 315	315-1000	1000-2000	2000-4000	ABOVE 4000	RA
	TOLERANCE	±0.1	±0.2	±0.3	±0.5	±0.8	±1.2	±2	±3	~

FOR DIMENSIONAL TOLERANCES OF SHEET METAL PARTS AND WELDED STRUCTURES, REFER STD. RD-227

UNSPECIFIED TOLERANCE FOR LINEAR AND ANGULAR DIMENSIONS REF. IS 2102 (PT.-1) (MEDIUM) | QUALITY OF WELD JOINTS REF. RD 230 MEDIUM

VALUES OF SURFACE TEXTURE SHALL BE AS PER COMPANY STD DS. 1012.C

WELDING SHALL BE CARRIED OUT AS PER IS. 9595-96

STATUS: PRODUCTION

COPY RIGHT & CONFIDENTIAL
THIS DOCUMENT IS THE EXCLUSIVE PROPERTY OF BEML & CONTAINS CONFIDENTIAL INFORMATION. THIS DOCUMENT OR ITS CONTENTS SHALL NOT BE USED, REPRODUCED OR DISCLOSED IN WHOLE OR IN PART. WITHOUT PRIOR WRITTEN PERMISSION OF BEML. THIS DOCUMENT & ALL ITS COPIES SHALL BE RETURNED TO BEML ON DEMAND
DRAWING RELEASED FROM PLM, PHYSICAL SIGNATURE NOT REQUIRED

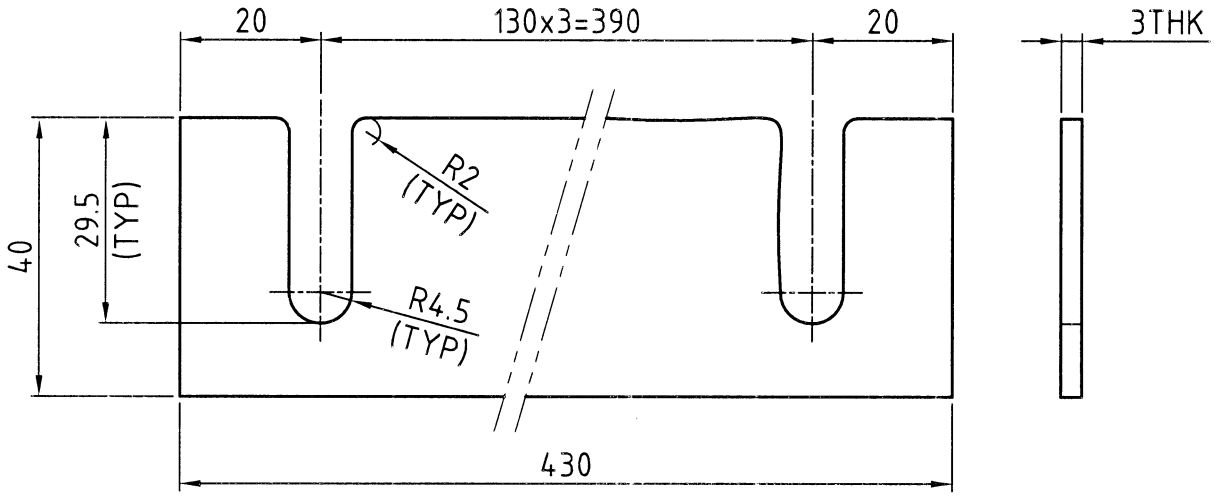

UNCONTROLLED

NOTE: △1

1. EPDM COLOUR: BLACK.
2. PART SHALL CONFORM TO PTS DOC No. GR/TD/1766.

SL.No.	QTY	PART / STOCK No.	DESCRIPTION	SIZE	COMPANY STD./I.S	Wt. (Kg)
				430x40x3THK	MATERIAL	

ALT.NO.	ECN NO/CHANGES	DATE	BY	CHKD	APPD
x1 △1	NOTE REVISED. ECN: 90900511	27/10/15	PURUSHOTH		

PRODUCT	DMRC BG METRO CARS		
REF DRG	–		
MATERIAL	EPDM		
HEAT TREAT.	–	APPD	JAYAPRAKASH 25/04/2011
SURFACE TREAT.	–	REVD	PV GAYATHRI 25/04/2011
TITLE	PACKING	CHKD	PV GAYATHRI 25/04/2011
		DRWN	V.YUVARANI 23/04/2011
SCALE 1:1		SHEET 1 OF 1	Wt.(Kg) -
BEML LIMITED		DRG No. 909-23114	ALT △1

GRADE No.	N1	N2	N3	N4	N5	N6	N7	N8	N9	N10	N11	N12
VALUE	0.025	0.05	0.1	0.2	0.4	0.8	1.6	3.2	6.3	12.5	25	50
SYMBOL	▽▽▽	▽▽▽	▽▽▽		▽▽▽	▽▽▽		▽▽▽		▽		~

SURFACE ROUGHNESS

A4